BARRACUDA

ASSEMBLING INSTRUCTION

LEVER PRO-TECT
FITTING

WWW.BARRACUDAMOTO.COM

LEGEND

1. SCREW
VITE
TORNILLO
SCHRAUBE
VIS

2. INSERT
INSERTO
INSERTO
METALLEINSATZ
INSERT

3. LEVER PROTECTOR
PARALEVA
PROTECTOR MANETA
HEBELSCHUTZ
PROTECTION LEVIER

4. SPACER
SPESSORE
ANTIVIBRACION
ABSTANDSHALTER
ESPACEUR

5. WASHER
RONDELLA
ARANDELA
SCHEIBE
RONDELLE

6. WASHER
RONDELLA
ARANDELA
SCHEIBE
RONDELLE

KN1000
HANDLEBAR ADAPTOR
ADATTATORE MANUBRIO
ADAPTADOR DE MANILLAR
LENKER ADAPTOR
ADAPTEURS DE GUIDON
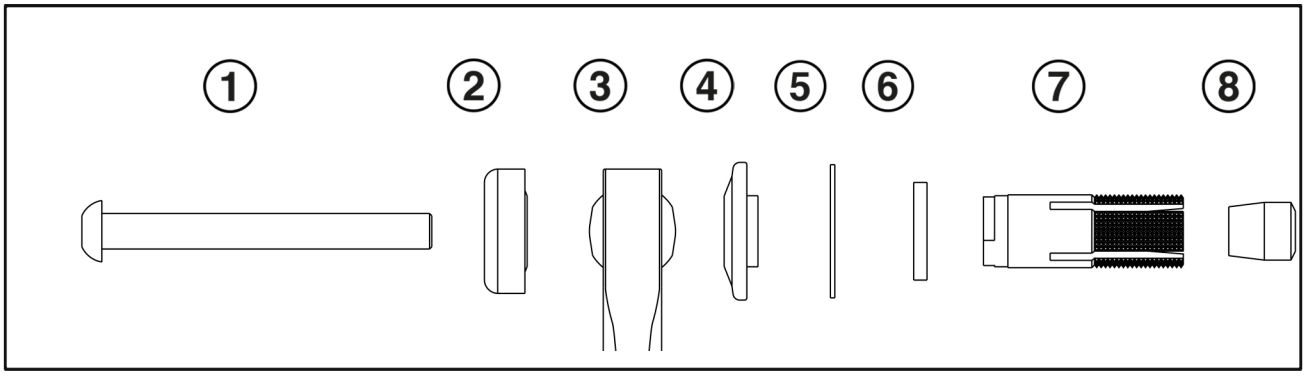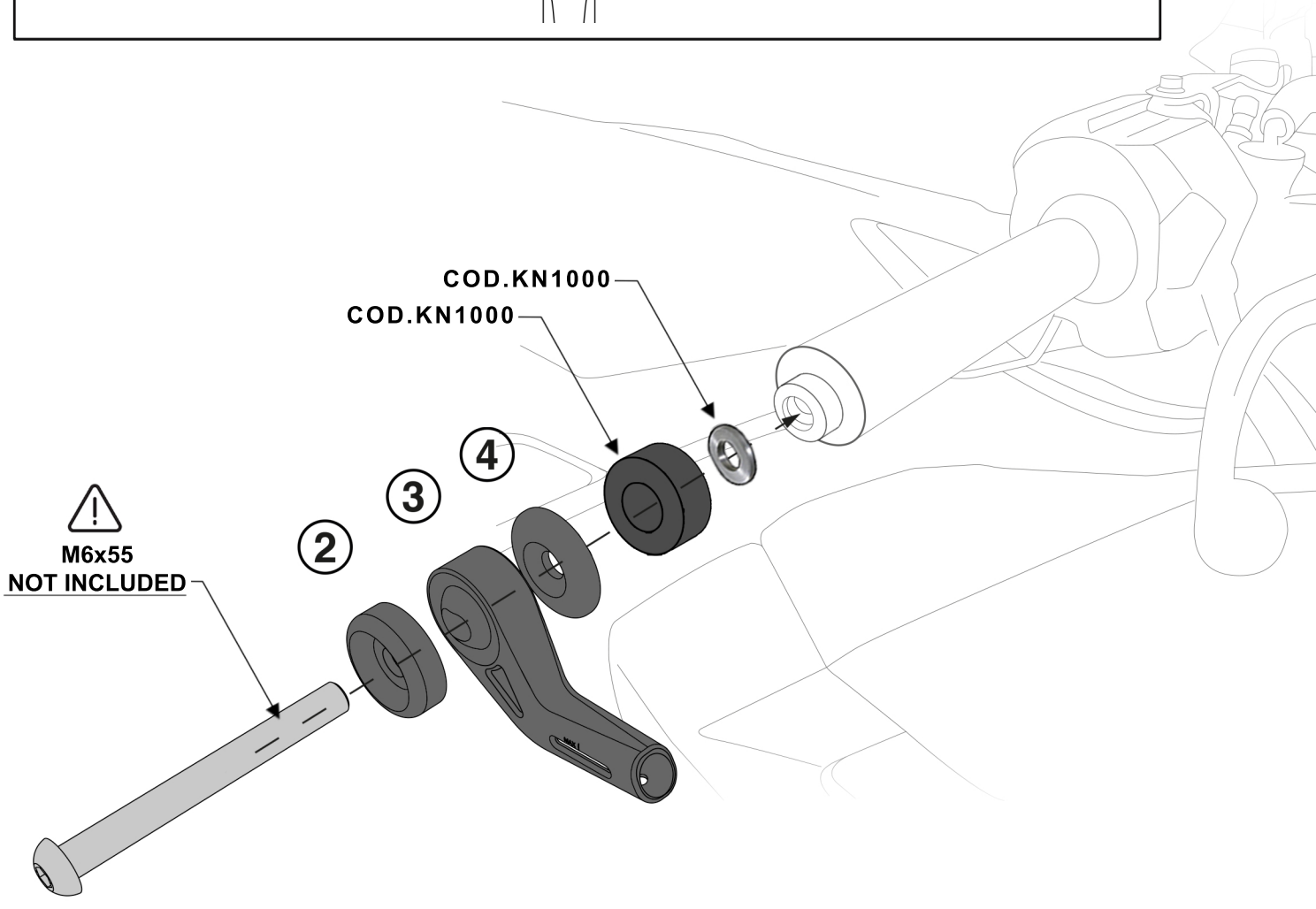
COMPLETE SET